6-POLES ELECTROMECHANICAL MOTORS
ELEKTROMECHANISCHE MOTOREN 6 POLE
MOT05-10

6-poles three-phase asynchronous motor, IP55 protection. Especially strong in cast iron with tropicalized winding made for external use. Protective cover for the oscillation control system in ABS with sealing gasket, protection level IP55.
Device for complete control of microswitches and connecting cables, and 2 cams for command of the independent regulation for the motor thrust.

Dreiphasen-Asynchronmotor 6 Pole, Schutzklasse IP55. Sehr robuste Struktur aus Gusseisen, mit tropentauglichen Wicklungen für den Einsatz im Freien. ABS-Schutzgehäuse für das Steuer- und Kontrollsystem der Schwingungen, mit Dichtung Schutzklasse IP55. Steuervorrichtung einschließlich Mikroschalter und Kabel sowie doppeltem Steuernocken zur unabhängigen Regulierung des Motorschubs.

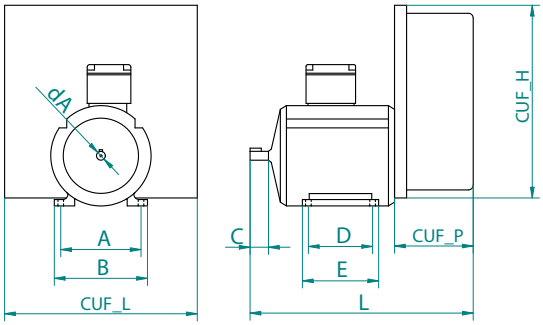

TECHNICAL CHARACTERISTICS

- 6P asynchronous three-phase motor protection IP55
- Protective cover in ABS of the swing control system
- Device of control with microswitches, wired cables and 2 control cams

TECHNISCHE EIGENSCHAFTEN

- Dreiphasen-Asynchronmotor 6 Pole, Schutzklasse IP55
- ABS-Schutzgehäuse für das Steuer- und Kontrollsystem der Schwingungen
- Steuervorrichtung einschließlich Mikroschalter und Kabel sowie doppeltem Steuernocken

CODE	DESCRIPTION
MOT0504001	6P MOTOR 0,12 KW 2 CAMS REDUCTION - GEAR INCLUDED
MOT0504002	6P MOTOR 0,18 KW 2 CAMS REDUCTION - GEAR INCLUDED
MOT0504003	6P MOTOR 0,25 KW 2 CAMS REDUCTION - GEAR INCLUDED
MOT0504004	6P MOTOR 0,37 KW 2 CAMS REDUCTION - GEAR INCLUDED
MOT0504005	6P MOTOR 0,55 KW 2 CAMS REDUCTION - GEAR INCLUDED
MOT0504006	6P MOTOR 0,75 KW 2 CAMS REDUCTION - GEAR INCLUDED
MOT0504007	6P MOTOR 1,10 KW 2 CAMS REDUCTION - GEAR INCLUDED
MOT0504008	6P MOTOR 1,50 KW 2 CAMS REDUCTION - GEAR INCLUDED
MOT0504009	6P MOTOR 1,70 KW 2 CAMS REDUCTION - GEAR INCLUDED

MOT1004001	6P MOTOR 0,12 KW 2 C REDUCTION - GEAR INCLUDED AND COMMAND BOX
MOT1004003	6P MOTOR 0,18 KW 2 C REDUCTION - GEAR INCLUDED AND COMMAND BOX
MOT1004005	6P MOTOR 0,25 KW 2 C REDUCTION - GEAR INCLUDED AND COMMAND BOX
MOT1004007	6P MOTOR 0,37 KW 2 C REDUCTION - GEAR INCLUDED AND COMMAND BOX
MOT1004009	6P MOTOR 0,55 KW 2 C REDUCTION - GEAR INCLUDED AND COMMAND BOX
MOT1004011	6P MOTOR 0,75 KW 2 C REDUCTION - GEAR INCLUDED AND COMMAND BOX
MOT1004013	6P MOTOR 1,10 KW 2 C REDUCTION - GEAR INCLUDED AND COMMAND BOX
MOT1004015	6P MOTOR 1,50 KW 2 C REDUCTION - GEAR INCLUDED AND COMMAND BOX
MOT1004017	6P MOTOR 1,70 KW 2 C REDUCTION - GEAR INCLUDED AND COMMAND BOX
MOT1004002	6P MOTOR 0,12 KW 2 C REDUCTION - GEAR INCLUDED WIRED COMMAND BOX
MOT1004004	6P MOTOR 0,18 KW 2 C REDUCTION - GEAR INCLUDED WIRED COMMAND BOX
MOT1004006	6P MOTOR 0,25 KW 2 C REDUCTION - GEAR INCLUDED WIRED COMMAND BOX
MOT1004008	6P MOTOR 0,37 KW 2 C REDUCTION - GEAR INCLUDED WIRED COMMAND BOX
MOT1004010	6P MOTOR 0,55 KW 2 C REDUCTION - GEAR INCLUDED WIRED COMMAND BOX
MOT1004012	6P MOTOR 0,75 KW 2 C REDUCTION - GEAR INCLUDED WIRED COMMAND BOX
MOT1004014	6P MOTOR 1,10 KW 2 C REDUCTION - GEAR INCLUDED WIRED COMMAND BOX
MOT1004016	6P MOTOR 1,50 KW 2 C REDUCTION - GEAR INCLUDED WIRED COMMAND BOX
MOT1004018	6P MOTOR 1,70 KW 2 C REDUCTION - GEAR INCLUDED WIRED COMMAND BOX

MOT05-10 DIMENSIONS TABLE
GRÖSSENTABELLE MOT05-10

CODE	A	B	C	D	E	L	dA	CUF_L	CUF_H	CUF_P
MOT0504001 MOT1004001 MOT1004002	100	116	23	80	95	250	11	240	240	98
MOT0504002 MOT1004003 MOT1004004 MOT0504003 MOT1004005 MOT1004006	112	132	30	90	113,5	270	14	240	240	98
MOT0504004 MOT1004007 MOT1004008 MOT0504005 MOT1004009 MOT1004010	125	149	40	100	125,5	290	19	240	240	98
MOT0504006 MOT1004011 MOT1004012	140	164	50	100	131	320	24	240	240	98
MOT0504007 MOT1004013 MOT1004014	140	164	50	125	156	345	24	240	240	98
MOT0504008 MOT1004015 MOT1004016 MOT0504009 MOT1004017 MOT1004018	160	188	60	140	173	380	24	240	240	98

TABLE BELL/MOTOR/SPROCKET – TABELLE GLOCKE/MOTOR/RITZEL
MOT05-10

TONE	ANGLO-SAXON TONE	BELL DIAMETER (mm)	WEIGHT (Kg)	FALLING CLAPPER BELL 6P MOTOR (KW)	SPROCKET Z*	FLYING CLAPPER BELL 6P MOTOR (KW)	SPROCKET*
SOL	G2	</= 470	</= 60	0,12/0,18 KW MOT0504001 MOT0504002 MOT1004001 MOT1004002 MOT1004003 MOT1004004	10	0,12/0,18 KW MOT0504001 MOT0504002 MOT1004001 MOT1004002 MOT1004003 MOT1004004	10
SOLb	Fis2	500	72	0,18 KW MOT0504002 MOT1004003 MOT1004004	10	0,18 KW MOT0504002 MOT1004003 MOT1004004	10
FA	F2	530	85	0,18 KW MOT0504002 MOT1004003 MOT1004004	11	0,18 KW MOT0504002 MOT1004003 MOT1004004	10
MI	E2	560	100	0,18 KW MOT0504002 MOT1004003 MOT1004004	11	0,18 KW MOT0504002 MOT1004003 MOT1004004	10
MIb	Dis2	595	120	0,18 KW MOT0504002 MOT1004003 MOT1004004	12	0,25 KW MOT0504003 MOT1004005 MOT1004006	11
RE	D2	630	140	0,25 KW MOT0504003 MOT1004005 MOT1004006	12	0,25 KW MOT0504003 MOT1004005 MOT1004006	11
REb	Cis2	665	170	0,25 KW MOT0504003 MOT1004005 MOT1004006	12	0,25 KW MOT0504003 MOT1004005 MOT1004006	11
DO	C2	705	200	0,25 KW MOT0504003 MOT1004005 MOT1004006	14	0,25 KW MOT0504003 MOT1004005 MOT1004006	11
SI	B1	750	245	0,25 KW MOT0504003 MOT1004005 MOT1004006	14	0,37 KW MOT0504004 MOT1004007 MOT1004008	12
SIb	Ais1	795	290	0,37 KW MOT0504004 MOT1004007 MOT1004008	14	0,37 KW MOT0504004 MOT1004007 MOT1004008	12
LA	A1	840	340	0,37 KW MOT0504004 MOT1004007 MOT1004008	14	0,37 KW MOT0504004 MOT1004007 MOT1004008	12

* Approximate data calculated according to the following ratio: bell wheel diameter equal to 130% of the bell diameter (falling clapper bell) or 110% (flying clapper bell).
Nach folgendem Verhältnis berechnete Richtwerte: Der Durchmesser des Rades entspricht 130% (Glocken mit Fallköppel) bzw. 110% (Glocken mit Flugköppel) des Glockendurchmessers.

TABLE BELL/MOTOR/SPROCKET – TABELLE GLOCKE/MOTOR/RITZEL
MOT05-10

Lab	Gis1	890	410	0,37 KW MOT0504004 MOT1004007 MOT1004008	14	0,37 KW MOT0504004 MOT1004007 MOT1004008	12
SOL	G1	945	480	0,37 KW MOT0504004 MOT1004007 MOT1004008	16	0,55 KW MOT0504005 MOT1004009 MOT1004010	14
SOLb	Fis1	1000	550	0,55 KW MOT0504005 MOT1004009 MOT1004010	16	0,55 KW MOT0504005 MOT1004009 MOT1004010	14
FA	F1	1060	680	0,55 KW MOT0504005 MOT1004009 MOT1004010	16	0,55 KW MOT0504005 MOT1004009 MOT1004010	14
MI	E1	1120	810	0,55 KW MOT0504005 MOT1004009 MOT1004010	16	0,75 KW MOT0504006 MOT1004011 MOT1004012	14
MIb	Dis1	1185	980	0,75 KW MOT0504006 MOT1004011 MOT1004012	18	0,75 KW MOT0504006 MOT1004011 MOT1004012	14
RE	D1	1255	1200	0,75 KW MOT0504006 MOT1004011 MOT1004012	18	1,10 KW MOT0504007 MOT1004013 MOT1004014	16
REb	Cis1	1330	1400	1,10 KW MOT0504007 MOT1004013 MOT1004014	18	1,10 KW MOT0504007 MOT1004013 MOT1004014	16
DO	C1	1410	1680	1,10 KW MOT0504007 MOT1004013 MOT1004014	18	1,50 KW MOT0504008 MOT1004015 MOT1004016	18
SI	B0	1495	1950	1,50 KW MOT0504008 MOT1004015 MOT1004016	21	1,50 KW MOT0504008 MOT1004015 MOT1004016	18
Sib	Ais0	1580	2300	1.50 KW MOT0504008 MOT1004015 MOT1004016	21	1.70 KW MOT0504009 MOT1004017 MOT1004018	18

* Approximate data calculated according to the following ratio: bell wheel diameter equal to 130% of the bell diameter (falling clapper bell) or 110% (flying clapper bell).
Nach folgendem Verhältnis berechnete Richtwerte: Der Durchmesser des Rades entspricht 130% (Glocken mit Fallklöppel) bzw. 110% (Glocken mit Flugklöppel) des Glockendurchmessers.

8-POLES MOTORS WITH GEAR BOX AND ELECTROMAGNETIC BRAKE
MOTOREN 8 POLE MIT GETRIEBE UND ELEKTROMAGNETISCHER BREMSE
MOT25

8-poles three-phase asynchronous motor with electromagnetic brake 24 VDC. Especially strong in cast iron with tropicalized winding made for external use (IP55 protection). Junction box containing all the wiring, IP55 protection. Protective cover in PVC of the swing control system. Device for complete control of microswitches and connecting cables, and cam for command of the independent regulation for the thrust of the motor and the brake action.

Dreiphasen-Asynchronmotor 8 Pole mit elektromagnetischer Bremse 24 VDC. Struktur aus äußerst robustem Gusseisen mit tropentauglichen Wicklungen für Außenbereiche, Schutzklasse IP55. Verteilerkasten mit allen Verkabelungen, Schutzklasse IP55. PVC-Schutzgehäuse für das Steuer- und Kontrollsystem der Schwingungen. Steuervorrichtung einschließlich Mikroschaltern, Verkabelungen und Steuernocken zur unabhängigen Regulierung von Motorschub und Eingriff der Bremse.

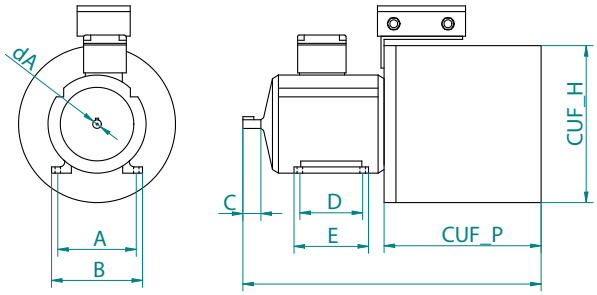

CODE	DESCRIPTION
MOT2504001	8P MOTOR 0,25KW 4C REDUCTION-GEAR AND ELECTROMAGNETIC BRAKE
MOT2504002	8P MOTOR 0,25KW 6C REDUCTION-GEAR AND ELECTROMAGNETIC BRAKE
MOT2504005	8P MOTOR 0,55KW 4C REDUCTION-GEAR AND ELECTROMAGNETIC BRAKE
MOT2504006	8P MOTOR 0,55KW 6C REDUCTION-GEAR AND ELECTROMAGNETIC BRAKE
MOT2504009	8P MOTOR 1,10KW 4C REDUCTION-GEAR AND ELECTROMAGNETIC BRAKE
MOT2504010	8P MOTOR 1,10KW 6C REDUCTION-GEAR AND ELECTROMAGNETIC BRAKE

DIMENSIONS TABLE / GRÖSSENTABELLE

CODE	A	B	C	D	E	L	dA	CUF_L	CUF_H	CUF_P
MOT2504001 MOT2504002	125	149	40	100	125,5	450	19	200	200	210
MOT2504005 MOT2504006	140	164	50	125	156	497	24	200	200	210
MOT2504009 MOT2504010	160	188	60	140	173	536	28	250	250	210

TABLE BELL/MOTOR/SPROCKET – TABELLE GLOCKE/MOTOR/RITZEL

TONE	ANGLO-SAXON TONE	BELL DIAMETER (mm)	WEIGHT (Kg)	8P MOTOR (KW))	SPROCKET Z*
FA - SI	F2 - B1	530 - 750	85 - 245	0,25 KW MOT2504001 MOT2504002	14 - 18
Sib - FA	AIS1 - F1	795 - 1060	290 - 680	0,55 KW MOT2504005 MOT2504006	18 - 24
MI - DO	E1 - C1	1120 - 1410	810 - 1680	1,1 KW MOT2504009 MOT250401	21 - 32

* Approximate data calculated according to the following ratio: bell wheel diameter equal to 170% of the bell diameter.
Nach folgendem Verhältnis berechnete Richtangaben: Der Durchmesser des Rades entspricht 170% des Glockendurchmessers.

ECATRON – ELECTRONIC MOTORS FOR SWINGING BELLS
ELEKTRONISCHE ECATRON-MOTOREN FÜR LÄUTEMASCHINEN
MOT15

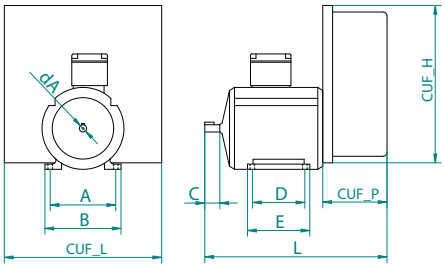

Revolutionary system for the bell ringing that combine electronic technology with tradition, and complete respect for the church, bell tower and bells. ECATRON offers these unquestionable advantages:

SAFETY:

- Reduction of the effort of pushing
- Protection of the support structures against stresses (framework, headstock or yoke)
- Protection of the bell tower (reduction of stresses)
- Emergency brake in case of malfunctions

INNOVATIVE:

- 220 VAC single-phase power supply: the three-phase is generated automatically
- Control of all of the most commonly used kinds of ringing: falling/flying clapper bell, tollings etc.
- Use of low-power standard motors
- Elimination of the electrical board in the bell tower
- Regulation of sound parameters via simple commands
- Self-diagnosis of the working compatibly with existing systems
- Self-regulation that works independently of consumption and working temperature with automatic electronic protection against overheating and malfunctions
- Braking of the bell for a quick stop of the ringing

RESPECT FOR TRADITION:

- Complete quality of the manual ringing
- Possibility of special ringing that needs the synchronization of the bells
- Use of particular devices such as bell clapper stop, synchronized chiming

TECHNICAL CHARACTERISTICS

- 6P asynchronous three-phase motor, IP55 protection
- ABS protective case of the system control
- 220 VAC power supply
- Additional programmable relay outputs

Revolutionäres System zum Läuten der Glocken, das Elektronik und Tradition vereint, unter absoluter Beachtung der Bedürfnisse der Kirchen, Glockentürme und Glocken. ECATRON bietet wichtige Vorteile:

SICHERHEIT:

- Verringerung der Schubkräfte
- Schutz der Stützstrukturen vor zu starken Beanspruchungen (Glockenstuhl - Joch)
- Schutz des Glockenturms (Reduzierung der Erschütterungen)
- Notbremse bei Betriebsanomalien

INNOVATION:

- Versorgung 220 VAC einphasig: der Drehstrom wird automatisch erzeugt
- Steuerung aller gebräuchlichen Arten des Läutens: mit Fallklöppel normal, hoch, mit Flugklöppel, mit Überschlag, Volée usw.
- Einsatz von Standardmotoren mit reduzierter Leistung
- Keine Schalttafel am Glockenturm mehr
- Einstellung der Klangparameter mit einfachen Befehlen
- Eigendiagnose und Kompatibilität mit bestehenden Systemen
- Eigenregulierung, unabhängig vom Verschleißzustand und von der Betriebstemperatur, mit automatischer elektronischer Schutzvorrichtung bei Überhitzung und Betriebsstörungen
- Abbremsen der Glocke für ein rasches Ausklingen des Tons

BEWAHRUNG DER TRADITION:

- Absolute Qualität des manuellen Klangs
- Möglichkeit besonderer Klänge, die den Synchronismus der Glocken erfordern
- Einsatz besonderer Vorrichtungen wie Klöppelfänger, synchronisierte Glockenschläge

TECHNISCHE EIGENSCHAFTEN

- Dreiphasen-Asynchronmotor 6 Pole, Schutzklasse IP55
- ABS-Schutzgehäuse für das Steuer- und Kontrollsystem
- Versorgung 220 VAC
- Zusätzliche Ausgänge mit programmierbaren Relais

CODE	DESCRIPTION
MOT1504001	6P MOTOR 0,18 KW ECATRON WITH ELECTRONIC ON BOARD
MOT1504002	6P MOTOR 0,25 KW ECATRON WITH ELECTRONIC ON BOARD
MOT1504003	6P MOTOR 0,37 KW ECATRON WITH ELECTRONIC ON BOARD
MOT1504004	6P MOTOR 0,55 KW ECATRON WITH ELECTRONIC ON BOARD
MOT1504005	6P MOTOR 0,75 KW ECATRON WITH ELECTRONIC ON BOARD
MOT1504006	6P MOTOR 1,10 KW ECATRON WITH ELECTRONIC ON BOARD
MOT1504020	6P MOTOR 0,18 KW ECATRON SEPARATE ELECTRONIC
MOT1504021	6P MOTOR 0,25 KW ECATRON SEPARATE ELECTRONIC
MOT1504022	6P MOTOR 0,37 KW ECATRON SEPARATE ELECTRONIC
MOT1504023	6P MOTOR 0,55 KW ECATRON SEPARATE ELECTRONIC
MOT1504024	6P MOTOR 0,75 KW ECATRON SEPARATE ELECTRONIC
MOT1504025	6P MOTOR 1,10 KW ECATRON SEPARATE ELECTRONIC

ECATRON DIMENSIONS TABLE / GRÖSSENTABELLE ECATRON-MOTOREN

CODE	A	B	C	D	E	L	dA	CUF_L	CUF_H	CUF_P
MOT1504001 MOT1504020	112	132	30	90	113,5	270	14	240	240	98
MOT1504002 MOT1504021	112	132	30	90	113,5	270	14	240	240	98
MOT1504003 MOT1504022	125	149	40	100	125,5	290	19	240	240	98
MOT1504004 MOT1504023	125	149	40	100	125,5	290	19	240	240	98
MOT1504005 MOT1504024	140	164	50	125	156	345	24	240	240	98
MOT1504006 MOT1504025	160	188	60	140	173	380	24	240	240	98

TABLE BELL/MOTOR/SPROCKET – TABELLE GLOCKE/ MOTOR/ RITZEL

FALLING CLAPPER – VOLTEO
GLOCKE MIT FALLKLÖPPEL – ÜBERSCHLAG

TONE FROM TO	ANGLO-SAXON TONE FROM TO	WEIGHT (KG) FROM TO	6P MOTOR EQUIPPED WITH ECATRON (KW)	SPROCKET Z*
FA DO	F3 C2	12 200	0,18 KW MOT1504001 MOT1504020	10
SI SOL	B1 G1	245 480	0,25 KW MOT1504002 MOT1504021	12
SOLb MIb	Fis1 Dis1	550 980	0,37 KW MOT1504003 MOT1504022	14
RE DO	D1 C1	1200 1680	0,55KW MOT1504004 MOT1504023	16
SI LA	B0 A0	1950 2800	0,75 KW MOT1504005 MOT1504024	18
LAb SOL	Gis0 G0	3300 3900	1,10 KW MOT1504006 MOT1504025	21

FLYING CLAPPER
GLOCKE MIT FLUGKLÖPPEL

TONE FROM TO	ANGLO-SAXON TONE FROM TO	WEIGHT (KG) FROM TO	6P MOTOR EQUIPPED WITH ECATRON (KW)	SPROCKET Z*
FA REb	F3 Cis2	12 170	0,18 KW MOT1504001 MOT1504020	10
DO LA	C2 A1	200 340	0,25 KW MOT1504002 MOT1504021	12
LAb SOLb	Gis1 Fis1	410 550	0,37 KW MOT1504003 MOT1504022	14
FA MI	F1 E1	680 800	0,55KW MOT1504004 MOT1504023	16
MIb RE	Dis1 D1	980 1140	0,75 KW MOT1504005 MOT1504024	16
REb SI	Cis1 B0	1400 1950	1,10 KW MOT1504006 MOT1504025	21

* Approximate data calculated according to the following ratio: bell wheel diameter equal to 130% of the bell diameter (falling clapper bell), 170% (volteo) or 110% (flying clapper).
Nach folgendem Verhältnis berechnete Richtangaben: Fallklöppel: Raddurchmesser entsprechend 130% des Glockendurchmessers; Überschlag: Raddurchmesser entsprechend 170% des Glockendurchmessers; Flugklöppel: Raddurchmesser entsprechend 110% des Glockendurchmessers.

BELL SWINGING LINEAR MOTORS
LINEARMOTOR FÜR LÄUTEMASCHINEN
MOT30

These bell swinging linear motors do not need a chain or any other physical connection with the bell, the movement is transmitted magnetically. It is extremely silent and requires very little maintenance thanks to the absence of moving mechanical parts subject to wear. The installation kit includes everything necessary for the installation: inductor, rotor, power controller and sensor for the movement. Thanks to the linear motor we guarantee efficiency and excellent value for money without losing traditional sound performance. We propose different versions depending on the weight of the bell (up to 2500 kg).

Linearmotor für Läutemaschinen. Es wird keine Kette bzw. keine anderen physischen Verbindungen mit der Glocke benötigt, da die Übertragung der Bewegung magnetisch erfolgt. Der Motor ist äußerst geräuscharm und sehr wartungsfreundlich, weil es keine sich bewegenden, verschleißanfälligen mechanischen Teile gibt. Das Installations-Set enthält alles, was zur Montage erforderlich ist: Induktor, Anker, Leistungssteuerung und Bewegungssensor. Dank dem Linearmotor können Leistungsstärke und ein ausgezeichnetes Qualitäts-Leistungs-Verhältnis gewährleistet werden, ohne auf den traditionellen Klang verzichten zu müssen. Je nach dem Gewicht der Glocke (bis 2500 kg) bieten wir verschiedene Versionen.

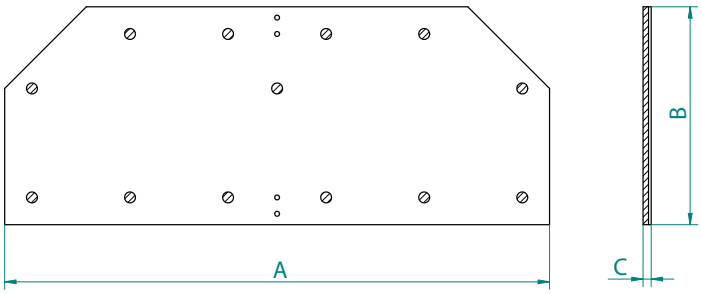

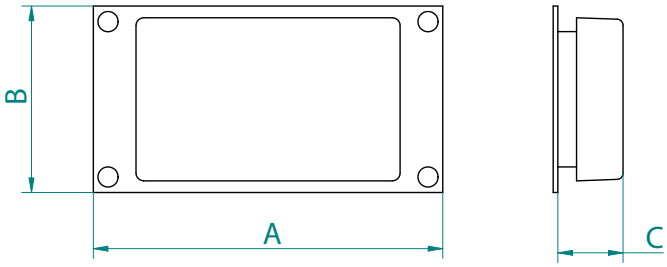

CODE	DESCRIPTION
MOT3004001	LINEAR MOTOR KIT 380V FOR BELLS UP TO 60 KG (132 LB)
MOT3004002	LINEAR MOTOR KIT 220V FOR BELLS UP TO 30 KG (66 LB)
MOT3004003	LINEAR MOTOR KIT 380V FOR BELLS UP TO 100 KG (220 LB)
MOT3004004	LINEAR MOTOR KIT 220V FOR BELLS UP TO MAX 70 KG (154 LB)
MOT3004005	LINEAR MOTOR KIT 380V FOR BELLS UP TO MAX 250 KG (551 LB)
MOT3004006	LINEAR MOTOR KIT 220V FOR BELLS UP TO MAX 100 KG (220 LB)
MOT3004007	LINEAR MOTOR KIT 380V FOR BELLS UP TO MAX 400 KG (881 LB)
MOT3004008	LINEAR MOTOR KIT 220V FOR BELLS UP TO MAX 400 KG (881 LB)
MOT3004009	LINEAR MOTOR KIT 380V FOR BELLS UP TO MAX 700KG (1543 LB)
MOT3004010	LINEAR MOTOR KIT 380V FOR BELLS UP TO MAX 1000 KG (2204 LB)
MOT3004011	LINEAR MOTOR KIT 380V FOR BELLS UP TO MAX 1300 KG (2866 LB)
MOT3004012	LINEAR MOTOR KIT 380V FOR BELLS UP TO 2500 KG (5511 LB)

GEAR BOX
GETRIEBE FÜR LÄUTEMASCHINEN
RID05-10-15

Device to be applied to the electric motors for the thrust control for the swinging of the bells. Simple and strong construction that is easily adjustable to any type of motor. Maintenance free. Two types of reduction available with a maximum of 4 cams to satisfy all requirements of ringing.

An den Elektromotoren zu installierende Vorrichtung für die Steuerung der Schübe zum Schwingen der Glocke. Einfach und robust gebaut, lassen sich diese Getriebe an jede Art von Motor anpassen. Vollkommen wartungsfrei.
Mit zwei Arten der Untersetzung und einer Höchstanzahl von 4 Nocken kann allen Klangerfordernissen genügt werden.

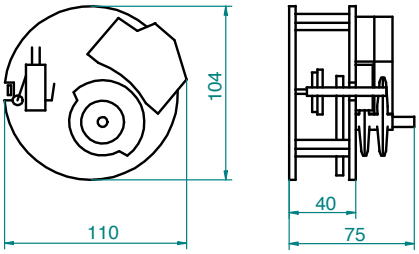

CODE	DESCRIPTION
RID0504001	GEAR BOX 1:20 1 CAM
RID0504002	GEAR BOX 1:20 2 CAMS
RID0504003	GEAR BOX 1:20 3 CAMS
RID0504004	GEAR BOX 1:20 4 CAMS
RID1004001	GEAR BOX 1:32 1.CAM CONCERT
RID1004002	GEAR BOX 1:32 2.CAMS CONCERT
RID1004003	GEAR BOX 1:32 3.CAMS CONCERT
RID1004004	GEAR BOX 1:32 4.CAMS CONCERT
RID1004005	GEAR BOX 1:32 6 CAMS CONCERT
RID1504001	GEAR BOX 1:8 1 CAM
RID1504002	GEAR BOX 1:8 2 CAMS
RID1504003	GEAR BOX 1:8 3 CAMS
RID1504004	GEAR BOX 1:8 4 CAMS

PIGZ 8-9-10-11-12-14-16-18-21-24-26-28-30-32-34-36-38-40

The number of sprocket's cogs is usually defined with "Z" followed by the number of cogs. Sprockets are employed to transmit through a chain the swinging movement from motor to bell. That element is very important because, if the sprocket is connected to the motor, the speed is directly proportionate to the number of cogs.

Die Aufgabe der Ritzel besteht darin, die Schwingbewegung mithilfe einer Kette vom Motor auf die Glocke zu übertragen.
Im Allgemeinen wird die Anzahl der Zähne des Ritzels nach dem Buchstaben „Z" angegeben (z.B. 8 Zähne = Z8). Diese Angabe ist sehr wichtig, denn die Geschwindigkeit verhält sich direkt proportional zur Anzahl der Zähne.

CODE	DESCRIPTION
PIG-Z8/11/316	SPROCKET Z8 D.11X3/16"
PIG-Z9/11/316	SPROCKET Z9 D.11X3/16"
PIG-Z10/14/316	SPROCKET Z10 D.14X3/16"
PIG-Z10/14/516	SPROCKET Z10 D.14X5/16"
PIG-Z11/14/316	SPROCKET Z11 D.14X3/16"
PIG-Z11/14/516	SPROCKET Z11 D.14X5/16"
PIG-Z12/14/316	SPROCKET Z12 D.14X3/16"
PIG-Z12/14/516	SPROCKET Z12 D.14X5/16"
PIG-Z12/19/316	SPROCKET Z12 D.19X3/16"
PIG-Z12/19/516	SPROCKET Z12 D.19X5/16"
PIG-Z14/14/316	SPROCKET Z14 D.14X3/16"
PIG-Z14/14/516	SPROCKET Z14 D.14X5/16"
PIG-Z14/19/316	SPROCKET Z14 D.19X3/16"
PIG-Z14/19/516	SPROCKET Z14 D.19X5/16"
PIG-Z14/24/316	SPROCKET Z14 D.24X3/16"
PIG-Z14/24/516	SPROCKET Z14 D.24X5/16"
PIG-Z16/14/316	SPROCKET Z16 D.14X3/16"
PIG-Z16/14/516	SPROCKET Z16 D.14X5/16"
PIG-Z16/19/316	SPROCKET Z16 D.19X3/16"
PIG-Z16/19/516	SPROCKET Z16 D.19X5/16"
PIG-Z16/24/316	SPROCKET Z16 D.24X3/16"
PIG-Z16/24/516	SPROCKET Z16 D.24X5/16"
PIG-Z18/14/316	SPROCKET Z18 D.14X3/16"
PIG-Z18/14/516	SPROCKET Z18 D.14X5/16"
PIG-Z18/19/316	SPROCKET Z18 D.19X3/16"
PIG-Z18/19/516	SPROCKET Z18 D.19X5/16"
PIG-Z18/24/316	SPROCKET Z18 D.24X3/16"
PIG-Z18/24/516	SPROCKET Z18 D.24X5/16"
PIG-Z18/28/516	SPROCKET Z18 D.28X5/16"
PIG-Z21/19/316	SPROCKET Z21 D.19X3/16"
PIG-Z21/19/516	SPROCKET Z21 D.19X5/16"
PIG-Z21/24/316	SPROCKET Z21 D.24X3/16"
PIG-Z21/24/516	SPROCKET Z21 D.24X5/16"
PIG-Z21/28/516	SPROCKET Z21 D.28X5/16"
PIG-Z24/19/316	SPROCKET Z24 D.19X3/16"
PIG-Z24/19/516	SPROCKET Z24 D.19X5/16"
PIG-Z24/24/316	SPROCKET Z24 D.24X3/16"
PIG-Z24/24/516	SPROCKET Z24 D.24X5/16"
PIG-Z24/28/516	SPROCKET Z24 D.28X5/16"
PIG-Z26/28/516	SPROCKET Z26 D.28X5/16"
PIG-Z28/28/516	SPROCKET Z28 D.28X5/16"
PIG-Z30/28/516	SPROCKET Z30 D.28X5/16"
PIG-Z32/28/516	SPROCKET Z32 D.28X5/16"
PIG-Z34/28/516	SPROCKET Z34 D.28X5/16"
PIG-Z36/28/516	SPROCKET Z36 D.28X5/16"
PIG-Z38/28/516	SPROCKET Z38 D.28X5/16"
PIG-Z40/28/516	SPROCKET Z40 D.28X5/16"

CODE	DESCRIPTION
MOT0504001	6P MOTOR 0.12KW 2 CAMS REDUCTION-GEAR INCLUDED
MOT0504002	6P MOTOR 0.18KW 2 CAMS REDUCTION-GEAR INCLUDED
MOT0504003	6P MOTOR 0.25KW 2 CAMS REDUCTION-GEAR INCLUDED
MOT0504004	6P MOTOR 0.37KW 2 CAMS REDUCTION-GEAR INCLUDED
MOT0504005	6P MOTOR 0.55KW 2 CAMS REDUCTION-GEAR INCLUDED
MOT0504006	6P MOTOR 0.75KW 2 CAMS REDUCTION-GEAR INCLUDED
MOT0504007	6P MOTOR 1.10KW 2 CAMS REDUCTION-GEAR INCLUDED
MOT0504008	6P MOTOR 1.50KW 2 CAMS REDUCTION-GEAR INCLUDED
MOT0504009	6P MOTOR 1.70KW 2 CAMS REDUCTION-GEAR INCLUDED
MOT1004001	6P MOTOR 0.12KW 2 C REDUCTION-GEAR INCLUDED AND COMMAND BOX
MOT1004002	6P MOTOR 0.12KW 2C REDUCTION-GEAR INCLUDED WIRED COMMAND BOX
MOT1004003	6P MOTOR 0.18KW 2 C REDUCTION-GEAR INCLUDED AND COMMAND BOX
MOT1004004	6P MOTOR 0.18KW 2C REDUCTION-GEAR INCLUDED WIRED COMMAND BOX
MOT1004005	6P MOTOR 0.25KW 2 C REDUCTION-GEAR INCLUDED AND COMMAND BOX
MOT1004006	6P MOTOR 0.25KW 2C REDUCTION-GEAR INCLUDED WIRED COMMAND BOX
MOT1004007	6P MOTOR 0.37KW 2 C REDUCTION-GEAR INCLUDED AND COMMAND BOX
MOT1004008	6P MOTOR 0.37KW 2C REDUCTION-GEAR INCLUDED WIRED COMMAND BOX
MOT1004009	6P MOTOR 0.55KW 2 C REDUCTION-GEAR INCLUDED AND COMMAND BOX
MOT1004010	6P MOTOR 0.55KW 2C REDUCTION-GEAR INCLUDED WIRED COMMAND BOX
MOT1004011	6P MOTOR 0.75KW 2 C REDUCTION-GEAR INCLUDED AND COMMAND BOX
MOT1004012	6P MOTOR 0.75KW 2C REDUCTION-GEAR INCLUDED WIRED COMMAND BOX
MOT1004013	6P MOTOR 1.10KW 2 C REDUCTION-GEAR INCLUDED AND COMMAND BOX
MOT1004014	6P MOTOR 1.10KW 2C REDUCTION-GEAR INCLUDED WIRED COMMAND BOX
MOT1004015	6P MOTOR 1.50KW 2 C REDUCTION-GEAR INCLUDED AND COMMAND BOX
MOT1004016	6P MOTOR 1.50KW 2C REDUCTION-GEAR INCLUDED WIRED COMMAND BOX
MOT1004017	6P MOTOR 1.70KW 2 C REDUCTION-GEAR INCLUDED AND COMMAND BOX
MOT1004018	6P MOTOR 1.70KW 2C REDUCTION-GEAR INCLUDED WIRED COMMAND BOX
MOT2504001	8P MOTOR 0,25KW 4C REDUCTION-GEAR AND ELECTROMAGNETIC BRAKE
MOT2504002	8P MOTOR 0,25KW 6C REDUCTION-GEAR AND ELECTROMAGNETIC BRAKE
MOT2504005	8P MOTOR 0,55KW 4C REDUCTION-GEAR AND ELECTROMAGNETIC BRAKE
MOT2504006	8P MOTOR 0,55KW 6C REDUCTION-GEAR AND ELECTROMAGNETIC BRAKE
MOT2504009	8P MOTOR 1,10KW 4C REDUCTION-GEAR AND ELECTROMAGNETIC BRAKE
MOT2504010	8P MOTOR 1,10KW 6C REDUCTION-GEAR AND ELECTROMAGNETIC BRAKE
MOT1504001	6P MOTOR 0.18KW ECATRON WITH ELECTRONIC ON BOARD
MOT1504002	6P MOTOR 0.25KW ECATRON WITH ELECTRONIC ON BOARD

MOT1504003	6P MOTOR 0.37KW ECATRON WITH ELECTRONIC ON BOARD
MOT1504004	6P MOTOR 0,55KW ECATRON WITH ELECTRONIC ON BOARD
MOT1504005	6P MOTOR 0.75KW ECATRON WITH ELECTRONIC ON BOARD
MOT1504006	6P MOTOR 1.10KW ECATRON WITH ELECTRONIC ON BOARD
MOT1504020	6P MOTOR 0.18KW ECATRON SEPARATE ELECTRONIC
MOT1504021	6P MOTOR 0.25KW ECATRON SEPARATE ELECTRONIC
MOT1504022	6P MOTOR 0.37KW ECATRON SEPARATE ELECTRONIC
MOT1504023	6P MOTOR 0.55KW ECATRON SEPARATE ELECTRONIC
MOT1504024	6P MOTOR 0.75KW ECATRON SEPARATE ELECTRONIC
MOT1504025	6P MOTOR 1.10KW ECATRON SEPARATE ELECTRONIC
MOT3004001	LINEAR MOTOR KIT 380V FOR BELLS UP TO 60 KG (132 LB)
MOT3004002	LINEAR MOTOR KIT 220V FOR BELLS UP TO 30 KG (66 LB)
MOT3004003	LINEAR MOTOR KIT 380V FOR BELLS UP TO 100 KG (220 LB)
MOT3004004	LINEAR MOTOR KIT 220V FOR BELLS UP TO MAX 70 KG (154 LB)
MOT3004005	LINEAR MOTOR KIT 380V FOR BELLS UP TO MAX 250 KG (551 LB)
MOT3004006	LINEAR MOTOR KIT 220V FOR BELLS UP TO MAX 100 KG (220 LB)
MOT3004007	LINEAR MOTOR KIT 380V FOR BELLS UP TO MAX 400 KG (881 LB)
MOT3004008	LINEAR MOTOR KIT 220V FOR BELLS UP TO MAX 400 KG (881 LB)
MOT3004009	LINEAR MOTOR KIT 380V FOR BELLS UP TO MAX 700KG (1543 LB)
MOT3004010	LINEAR MOTOR KIT 380V FOR BELLS UP TO MAX 1000 KG (2204 LB)
MOT3004011	LINEAR MOTOR KIT 380V FOR BELLS UP TO MAX 1300 KG (2866 LB)
MOT3004012	LINEAR MOTOR KIT 380V FOR BELLS UP TO 2500 KG (5511 LB)
RID0504001	GEAR BOX 1:20 1 CAM
RID0504002	GEAR BOX 1:20 2 CAMS
RID0504003	GEAR BOX 1:20 3 CAMS
RID0504004	GEAR BOX 1:20 4 CAMS
RID1004001	GEAR BOX 1:32 1 CAM CONCERT
RID1004002	GEAR BOX 1:32 2 CAMS CONCERT
RID1004003	GEAR BOX 1:32 3 CAMS CONCERT
RID1004004	GEAR BOX 1:32 4 CAMS CONCERT
RID1004005	GEAR BOX 1:32 6 CAMS CONCERT
RID1504001	GEAR BOX 1:8 1 CAM
RID1504002	GEAR BOX 1:8 2 CAMS
RID1504003	GEAR BOX 1:8 3 CAMS
RID1504004	GEAR BOX 1:8 4 CAMS
PIG-Z8/11/316	SPROCKET Z8 D.11X3/16"

PIG-Z9/11/316	SPROCKET Z8 D.11X3/16"
PIG-Z10/14/316	SPROCKET Z10 D.14X3/16"
PIG-Z10/14/516	SPROCKET Z10 D.14X5/16"
PIG-Z11/14/316	SPROCKET Z11 D.14X3/16"
PIG-Z11/14/516	SPROCKET Z11 D.14X5/16"
PIG-Z12/14/316	SPROCKET Z12 D.14X3/16"
PIG-Z12/14/516	SPROCKET Z12 D.14X5/16"
PIG-Z12/19/316	SPROCKET Z12 D.19X3/16"
PIG-Z12/19/516	SPROCKET Z12 D.19X5/16"
PIG-Z14/14/316	SPROCKET Z14 D.14X3/16"
PIG-Z14/14/515	SPROCKET Z14 D.14X5/16"
PIG-Z14/19/316	SPROCKET Z14 D.19X3/16"
PIG-Z14/19/516	SPROCKET Z14 D.19X5/16"
PIG-Z14/24/316	SPROCKET Z14 D.24X3/16"
PIG-Z14/24/516	SPROCKET Z14 D.24X5/16"
PIG-Z16/14/316	SPROCKET Z16 D.14X3/16"
PIG-Z16/14/516	SPROCKET Z16 D.14X5/16"
PIG-Z16/19/316	SPROCKET Z16 D.19X3/16"
PIG-Z16/19/516	SPROCKET Z16 D.19X5/16"
PIG-Z16/24/316	SPROCKET Z16 D.24X3/16"
PIG-Z16/24/516	SPROCKET Z16 D.24X5/16"
PIG-Z18/14/316	SPROCKET Z18 D.14X3/16"
PIG-Z18/14/516	SPROCKET Z18 D.14X5/16"
PIG-Z18/19/316	SPROCKET Z18 D.19X3/16"
PIG-Z18/19/516	SPROCKET Z18 D.19X5/16"
PIG-Z18/24/316	SPROCKET Z18 D.24X3/16"
PIG-Z18/24/516	SPROCKET Z18 D.24X5/16"
PIG-Z18/28/516	SPROCKET Z18 D.28X5/16"
PIG-Z21/19/316	SPROCKET Z21 D.19X3/16"
PIG-Z21/19/516	SPROCKET Z21 D.19X5/16"
PIG-Z21/24/316	SPROCKET Z21 D.24X3/16"
PIG-Z21/24/516	SPROCKET Z21 D.24X5/16"
PIG-Z21/28/516	SPROCKET Z21 D.28X5/16"
PIG-Z24/19/316	SPROCKET Z24 D.19X3/16"
PIG-Z24/19/516	SPROCKET Z24 D.19X5/16"

ACCESSORIES

PIG-Z24/24/316	SPROCKET Z24 D.24X3/16"
PIG-Z24/24/516	SPROCKET Z24 D.24X5/16"
PIG-Z24/28/516	SPROCKET Z24 D.28X5/16"
PIG-Z26/28/516	SPROCKET Z26 D.28X5/16"
PIG-Z28/28/516	SPROCKET Z28 D.28X5/16"
PIG-Z30/28/516	SPROCKET Z30 D.28X5/16"
PIG-Z32/28/516	SPROCKET Z32 D.28X5/16"
PIG-Z34/28/516	SPROCKET Z34 D.28X5/16"
PIG-Z36/28/516	SPROCKET Z36 D.28X5/16"
PIG-Z38/28/516	SPROCKET Z38 D.28X5/16"
PIG-Z40/28/516	SPROCKET Z40 D.28X5/16"
MOT2004001	VARIANT C 10MF MOTOR 0.12KW 6P POWER 220V
MOT2004002	VARIANT C 16MF MOTOR 0.18KW 6P POWER 220V
MOT2004003	VARIANT C 25MF MOTOR 0.25KW 6P POWER 220V
MOT2004004	VARIANT C 35MF MOTOR 0.37KW 6P POWER 220V
MOT2004005	VARIANT C 50MF MOTOR 0.55KW 6P POWER 220V
MOT2004006	VARIANT C 50MF MOTOR 0.75KW 6P POWER 220V
MOT2004007	VARIANT C 76MF MOTOR 1.10KW 6P POWER 220V
MOT2004008	VARIANT C 76+35MF MOTOR 1.50KW 6P POWER 220V
MOT2004009	VARIANT C 76+50MF MOTOR 1.70KW 6P POWER 220V
MOT8001001	PROGRAMMING TERMINAL FOR ECATRON MOTOR
MOT8504001	FIXING BRACKET FOR MOTOR 0.12KW
MOT8504002	FIXING BRACKET FOR MOTOR 0.18-0.25KW
MOT8504003	FIXING BRACKET FOR MOTOR 0.37-0.55KW
MOT8504004	FIXING BRACKET FOR MOTOR 0.75-1.10KW
MOT8504005	FIXING BRACKET FOR MOTOR 1.5-1.70KW
MOT8504006	FIXING BRACKET FOR VOLTEO MOTOR UP TO 0.75 KW
MOT8504007	FIXING BRACKET FOR VOLTEO MOTOR > 0.75 KW
MOT9004035	PROGRAMMING TERMINAL FOR LINEAR MOTORS